LET'S GET PRACTICAL IN EPC CONTRACTS FOR WATER TRANSMISSION AND DISTRIBUTION SYSTEMS

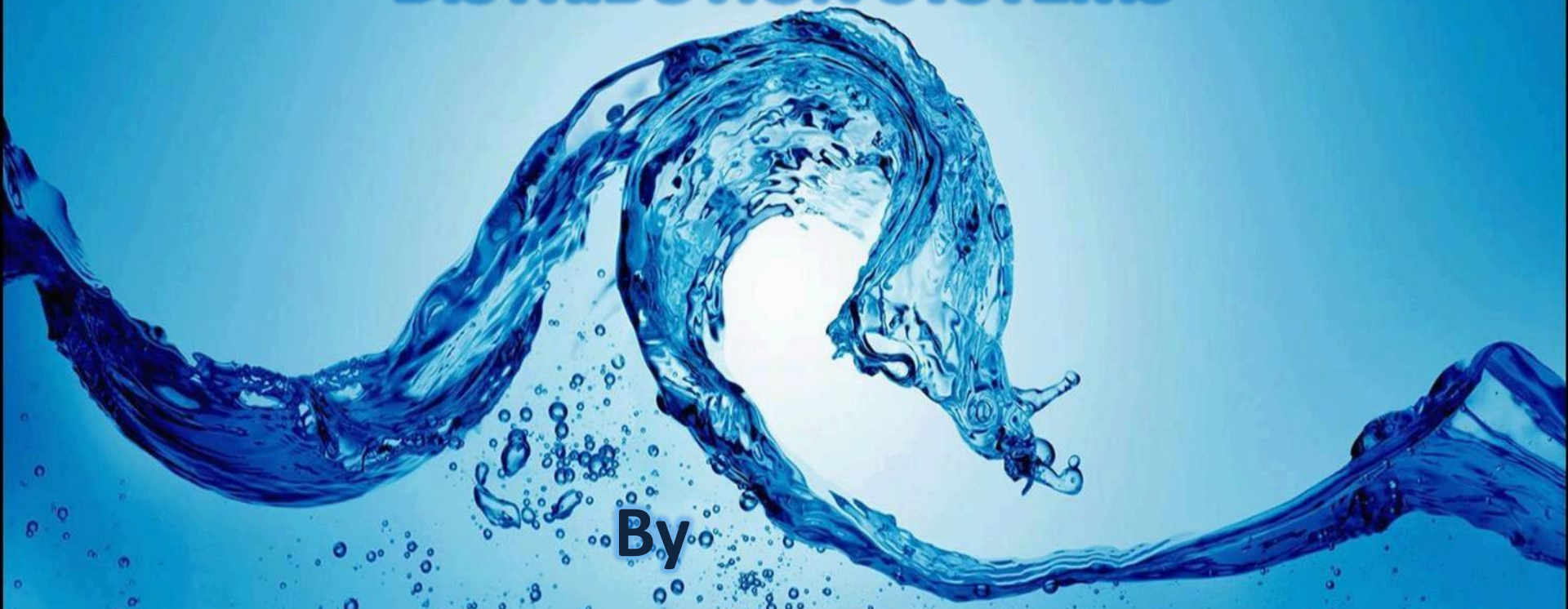

By

Predrag Mokric, HBK - QATAR

HBK

Hamad Bin Khalid Contracting Co. W.L.L

INTRODUCTION OF HBK CONTRACTING - ENGINEERING COMPANY

- HBK Contracting, based in Doha - Qatar, since 1971
- Commercial & Residential buildings, High Rise Towers, Bridge works, Water & Sewerage Facilities, Treatment Plants, Hospitals & University complexes
- HBK - ISO 9001:2008, 14001:2004, OHSAS: 18001:2007
  - Design and build water projects (EPC, PC)
  - Storage reservoirs – up to 36MIGD (124,344m^3)
  - Pumping Stations - up to 2.5m^3/s
  - Transmission/distribution water pipelines - up to 1600mmØ DI pipe
  - Water Systems, Hydraulic & Surge Studies/Analysis, Surge Vessel Design & Installation
- HBK provides value engineering & high efficient procedures
- HBK is recognized by KAHRAMAA–QEWC as the leading A-CLASS Contractor

WATER PROJECTS IN QATAR

- GTC 353/2010
- GTC 275/2009
- GTC 220/2008
- GTC 158/2007
- GTC 128/2006
- GTC 70/2005
- GTC 45/2004
- 22/C/2000
- RAF A1 SURGE VESSEL
- RL A SURGE VESSEL
- AL KHOR BPS SURGE VESSEL

VAVE IN EPC WATER/ WASTE WATER CONTRACTS

- Value Analysis/Value Engineering is a highly technical process that generates alternatives and provide solutions but secure functions at the greatest worth.
- Improve quality and design based on Contractor's construction and operation/maintenance experience.
- Improve construction speed/Reduce project duration
- Improve efficiency and functionality of water system through problems solving.
- Savings on operation and maintenance costs

HBK

PROJECT DEVELOPMENT CHART WITH VA/VE APPROACH TO EPC/PC CONTRACT

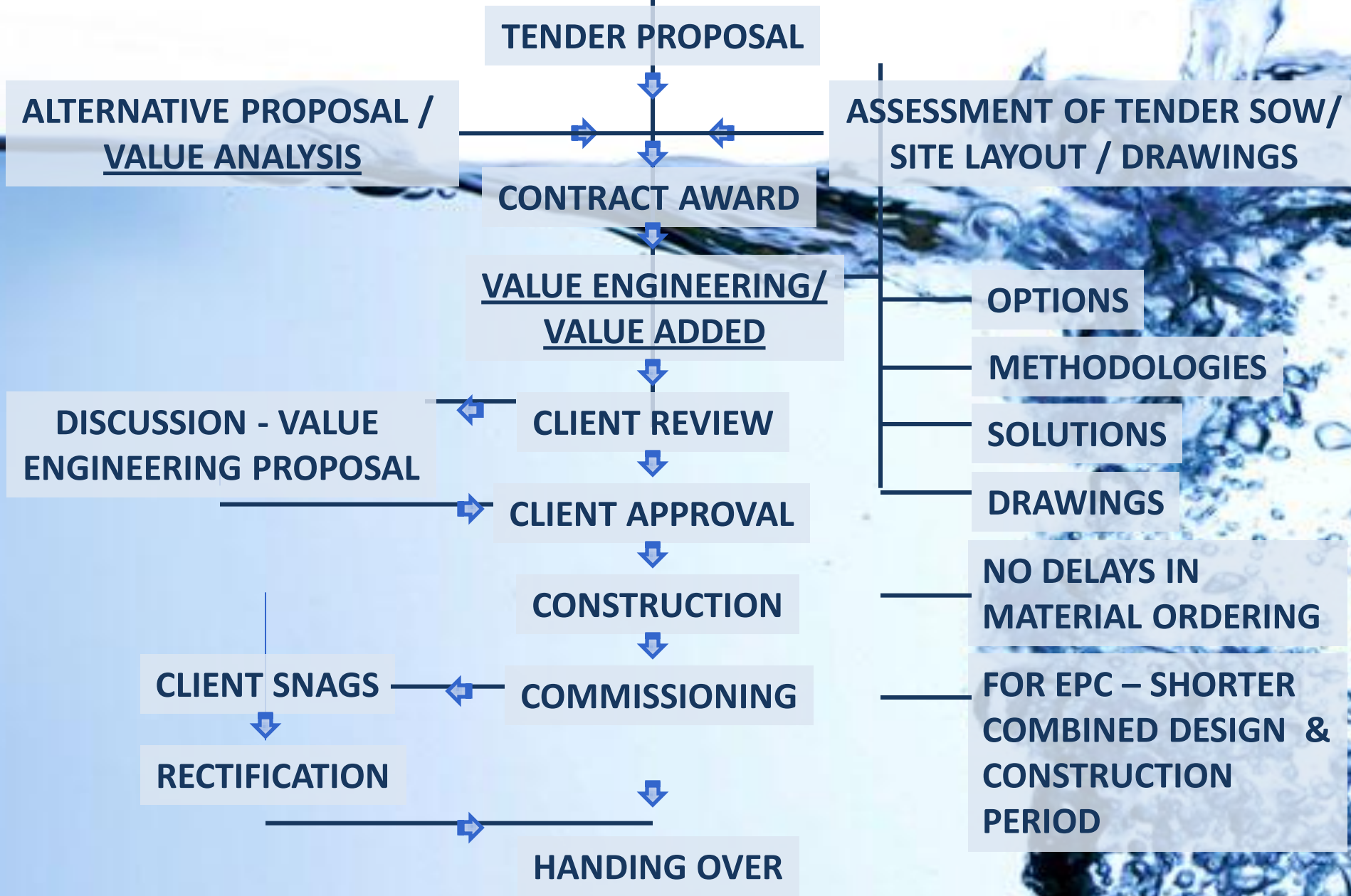

HBK

VA/VE & PRACTICAL PROBLEMS

1. Air formation & movement in long transmission/pumping mains, impact on operation and solutions

2. Isolation/Butterfly valves installation and operation in large diameter pumping mains

AIR IN PUMPING MAINS

- Air water flow is undesirable in water/waste water transmission systems in steady state operation mode
- Water & Wastewater pumping mains are subject to air entrainment, air pocket formation and air movement in both directions.
- Air pocket accumulation and movement cause pumping head increase, flow reduction, encourages erosion on DI pipes lined with cement mortar, increase damages during transient flow conditions,
- Air is compressible, stores energy, reacts like a spring causing local surge.

Note: Friction Air/Water > Friction Water/Wall of pipe

HOW AIR IS INTRODUCED TO PIPELINE

- Release of soluble air from water when the temperature rises and/or pressure changes. Bubbles grow, accumulate and flow in both direction, opposite to flow of water.
- Malfunctioning Air Valves and entraining of air during transient flow condition.
- Entraining large amount of air at the pump station suction side
- If not removed during initial filling by high flushing velocity air may remain in pipeline in low velocities operation.

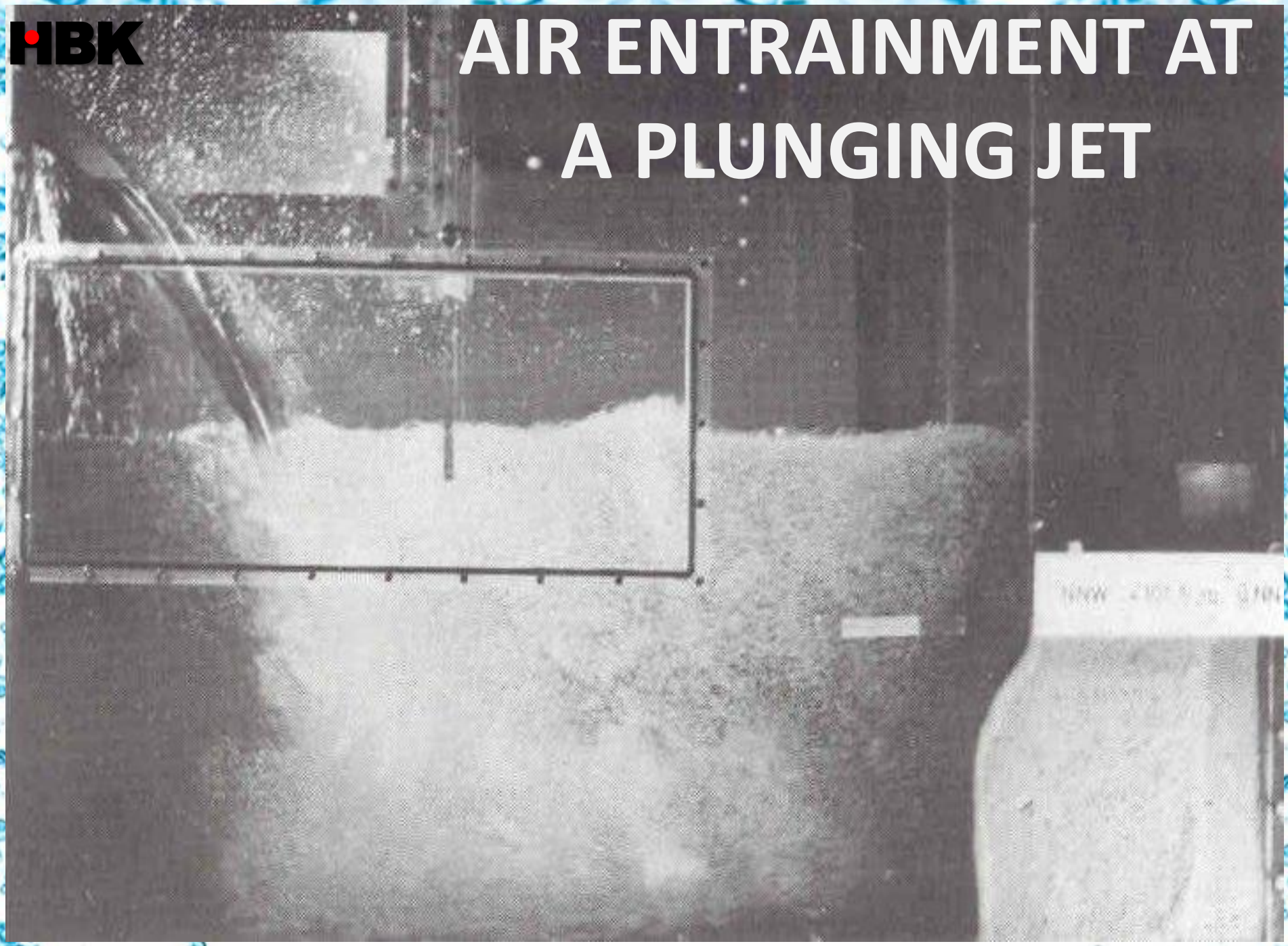
HBK
AIR ENTRAINMENT AT
A PLUNGING JET

TRANSPORT MODE OF AIR

- In a downward inclined pipe it is seen that at low concentrations of air the air bubbles stay small (order of magnitude 10 mm).
- Decreasing the water discharge or increasing the air discharge, bubbles show a tendency to aggregate forming larger bubbles and air plugs.
- This leads to a chaotic process in which a stream of large air pockets/plugs flows upward (in the opposite directions as the water flow) while a second stream of smaller bubbles is being transported downward.
- Hydraulic 3D jump in downward inclined pipes

AIR MOVEMENT IN PUMPING MAINS

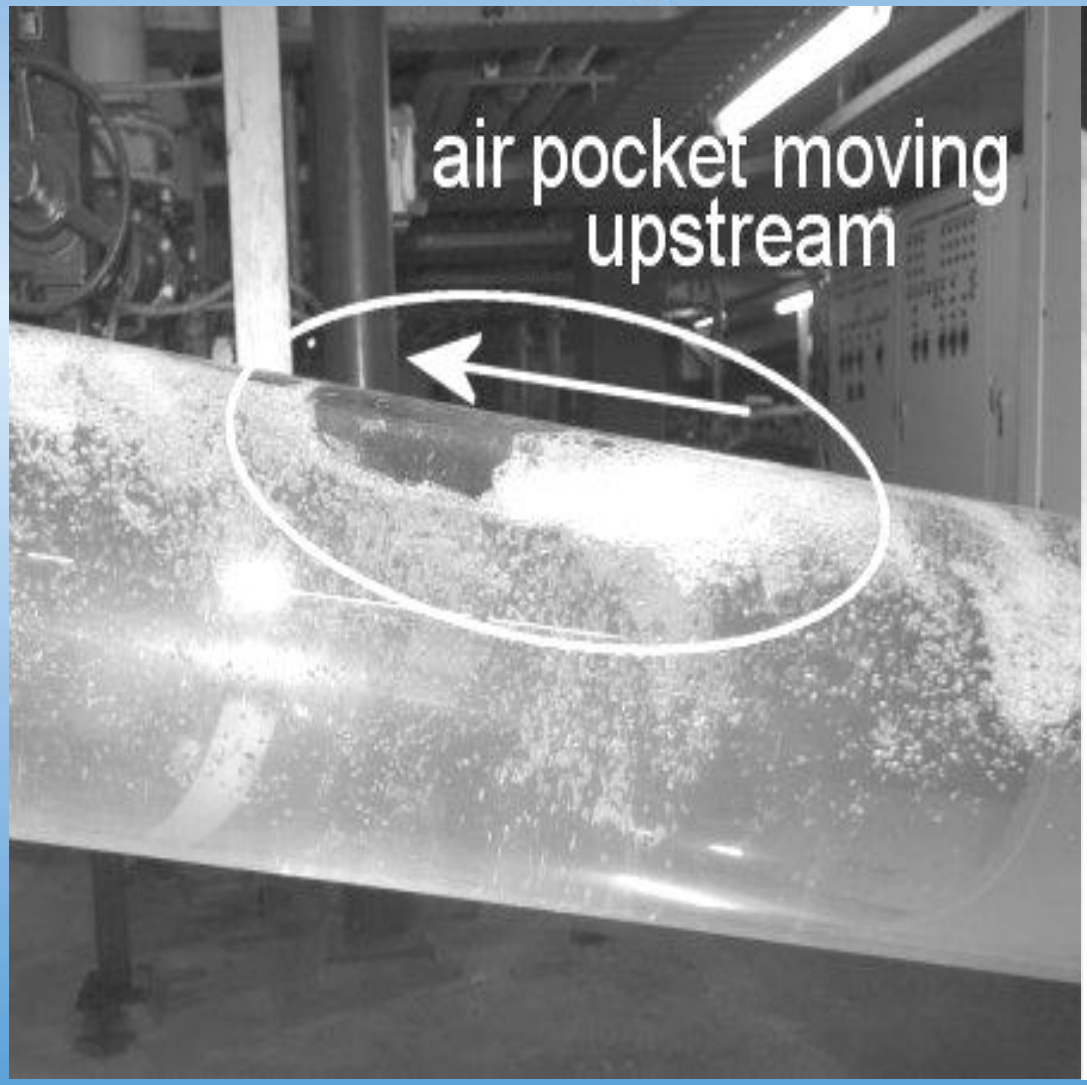

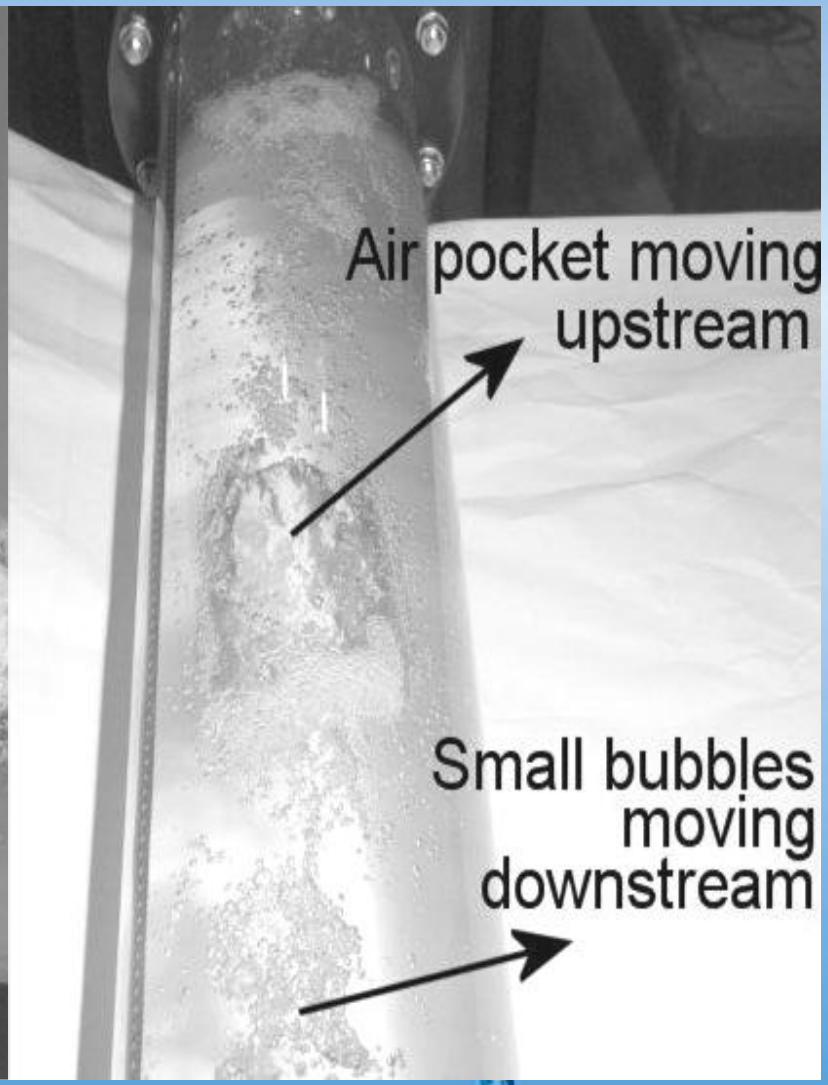

HYDRAULIC JUMP

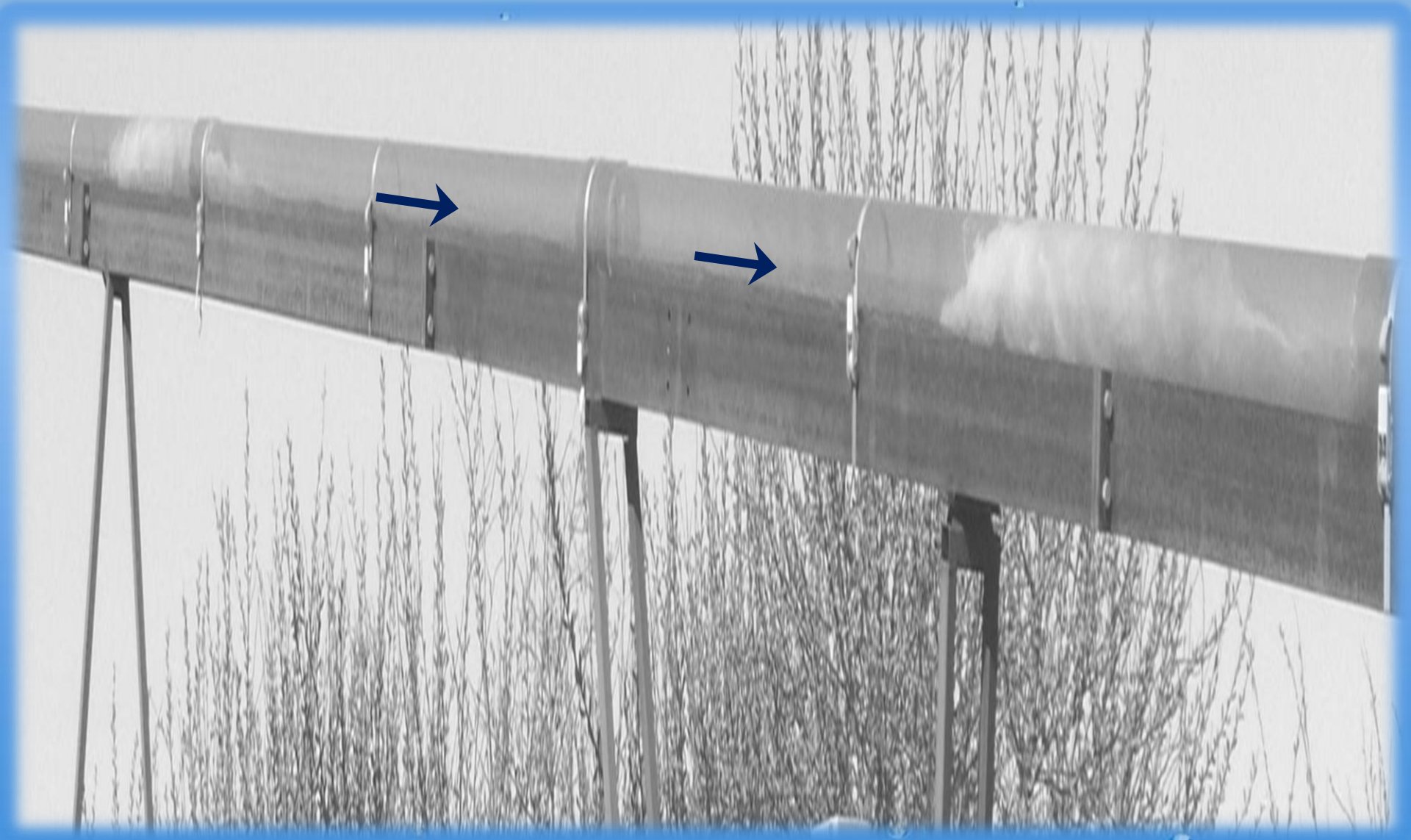

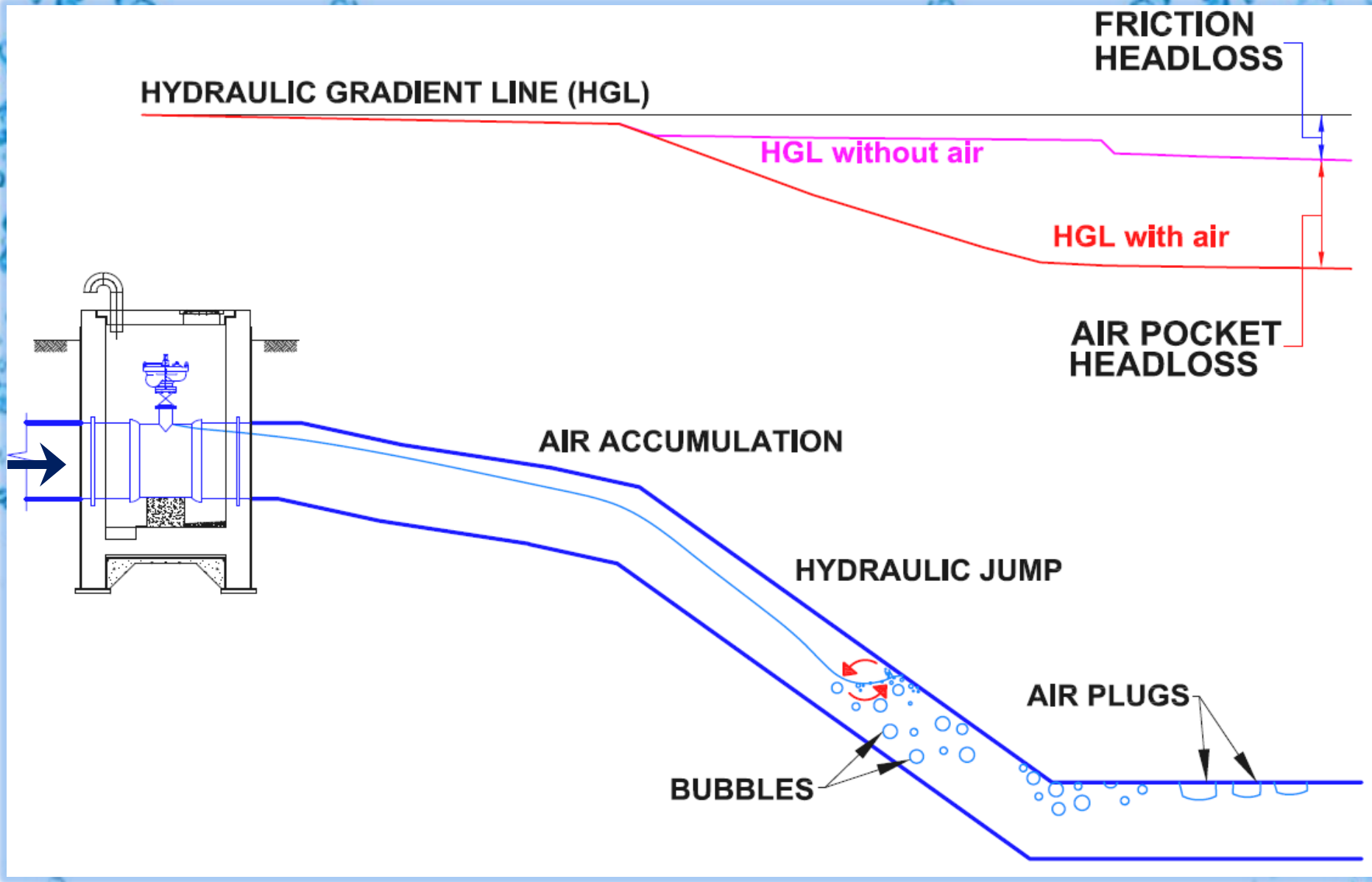
FRICTION
HEADLOSS
HYDRAULIC GRADIENT LINE (HGL)
HGL without air
HGL with air
AIR POCKET
HEADLOSS
AIR ACCUMULATION
HYDRAULIC JUMP
AIR PLUGS
BUBBLES

RECOMMENDATIONS

- The air valve chambers with an air accumulator. Equal tee with two triple action air valves for pipes DN ≥ 900 mm.
- For DN < 900 mm at least D/2 branch with one triple action air valve
- Inclusion of other parameters such as pipe diameter, pipeline downward sloping angle, friction factor, velocity criterion for the occurrence of multiple air pockets in a downward sloping etc during the pipeline profile design and construction.
- The composition of wastewater, i.e. lower surface tension and solids content in design of wastewater rising mains.

AIR VALVE CHAMBER ARRANGEMENT

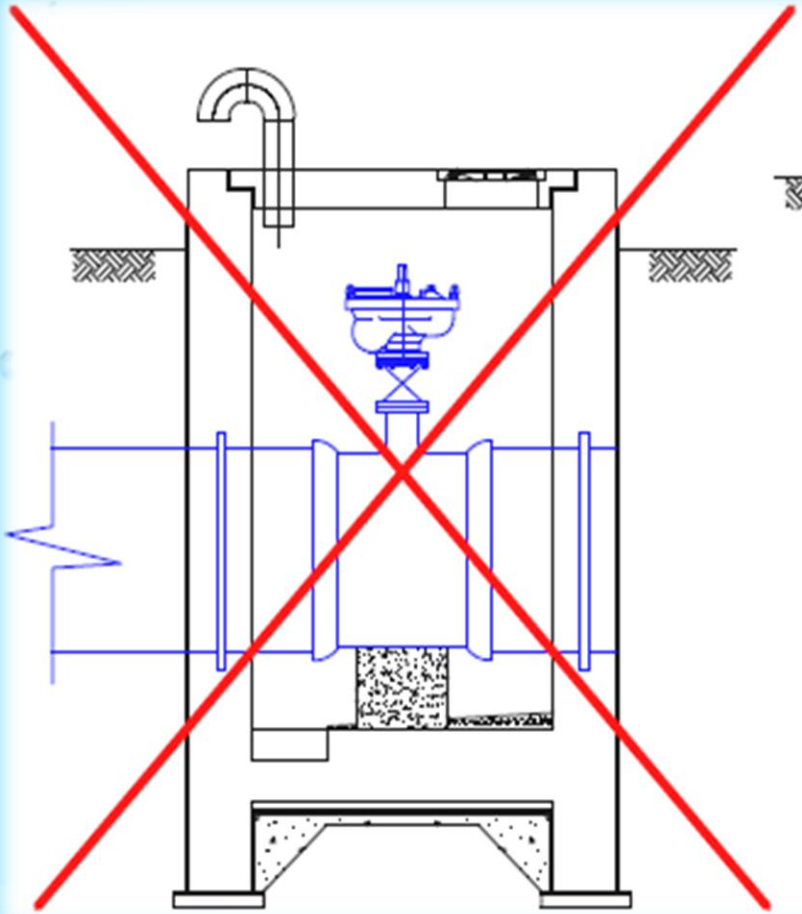

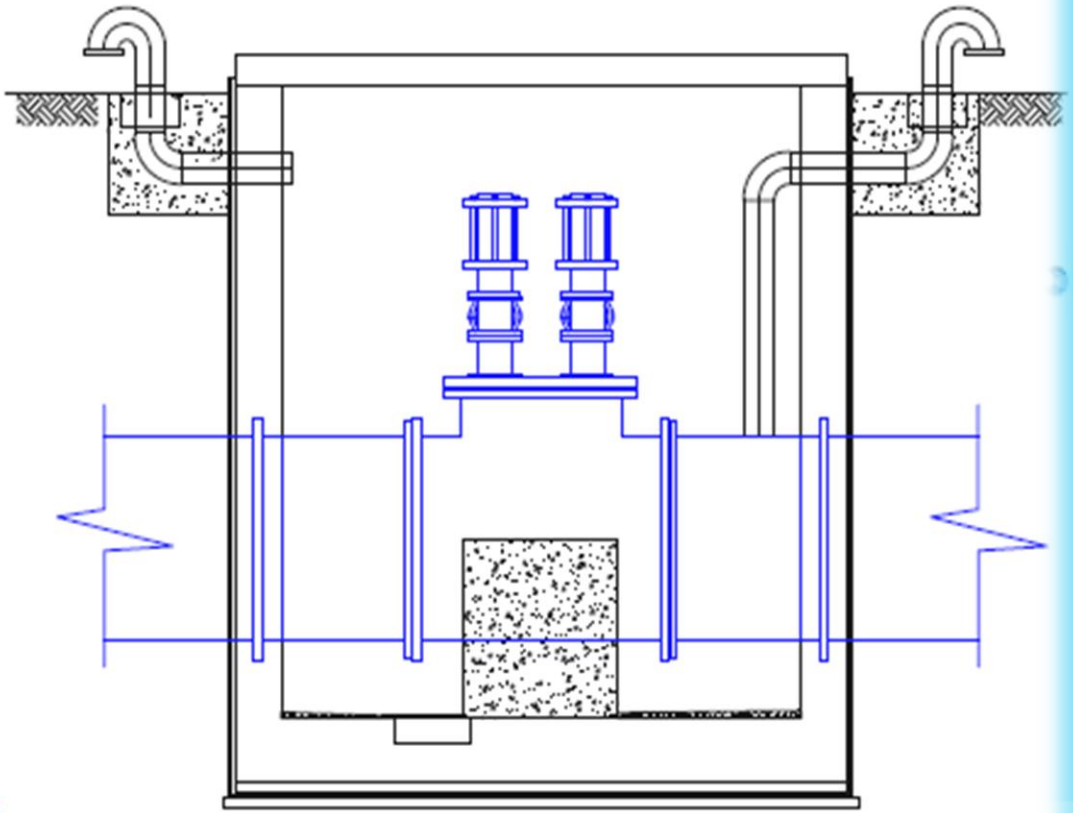

HBK

GENERAL ARRANGEMENT - AIR VALVE CHAMBER

BUTTERFLY VALVE INSTALLATION VS OPERATION

- A disc outside of valve body may enter the point of turbulence.
- The velocity profile of the discharge of an elbow or tee is not symmetric.
- The result can be fluid dynamic torque that is twice the magnitude of that found for a valve with a straight run of pipe upstream.
- The resultant eccentric forces applied to valve disk produces excessive vibration and disk flutter which eventually may damage the disc, cause difficulties in open/close operation i.e valve jamming, passing of BV or completely destroy the valve.

HBK

STANDARD ARRANGEMENT

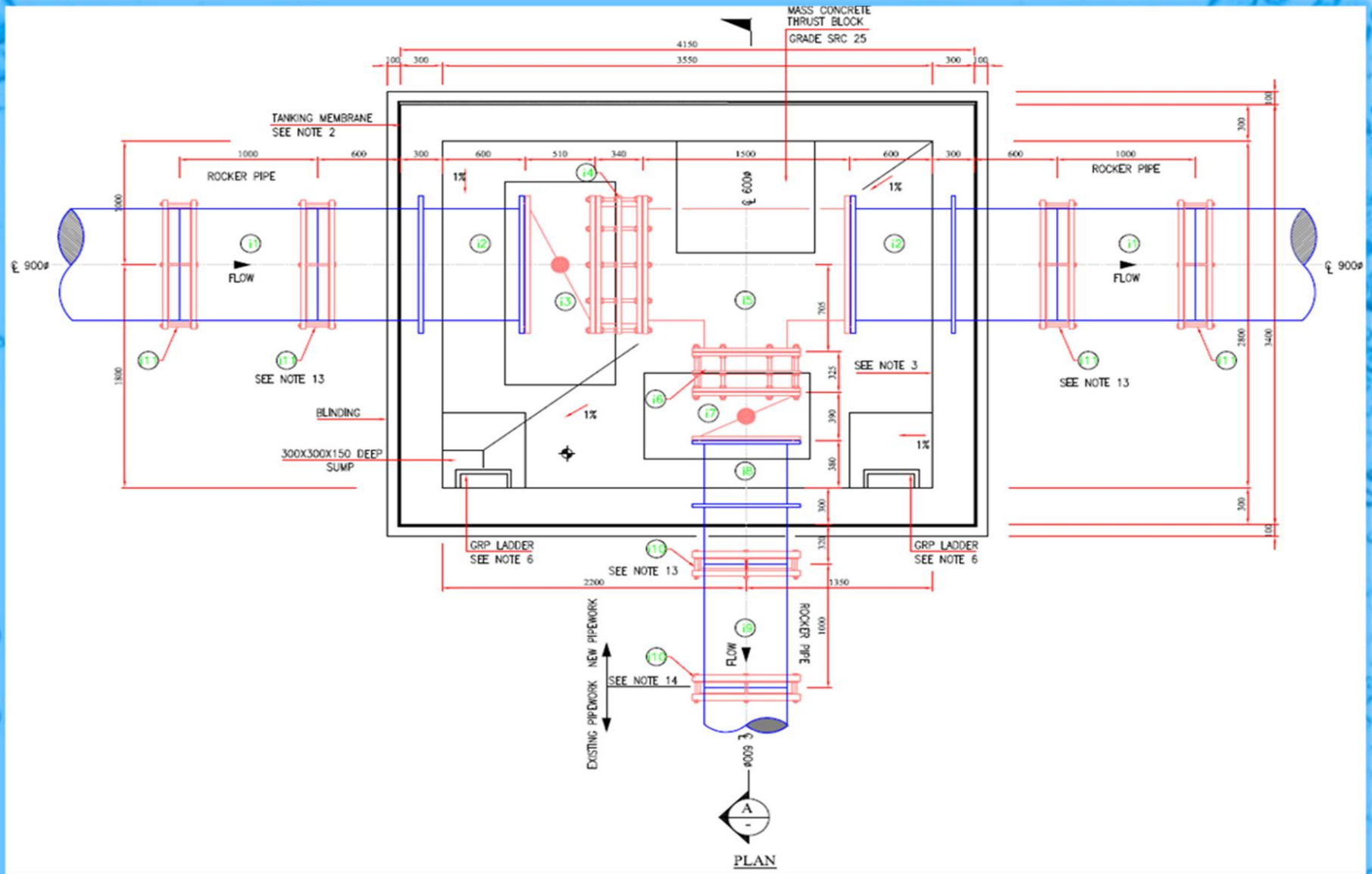

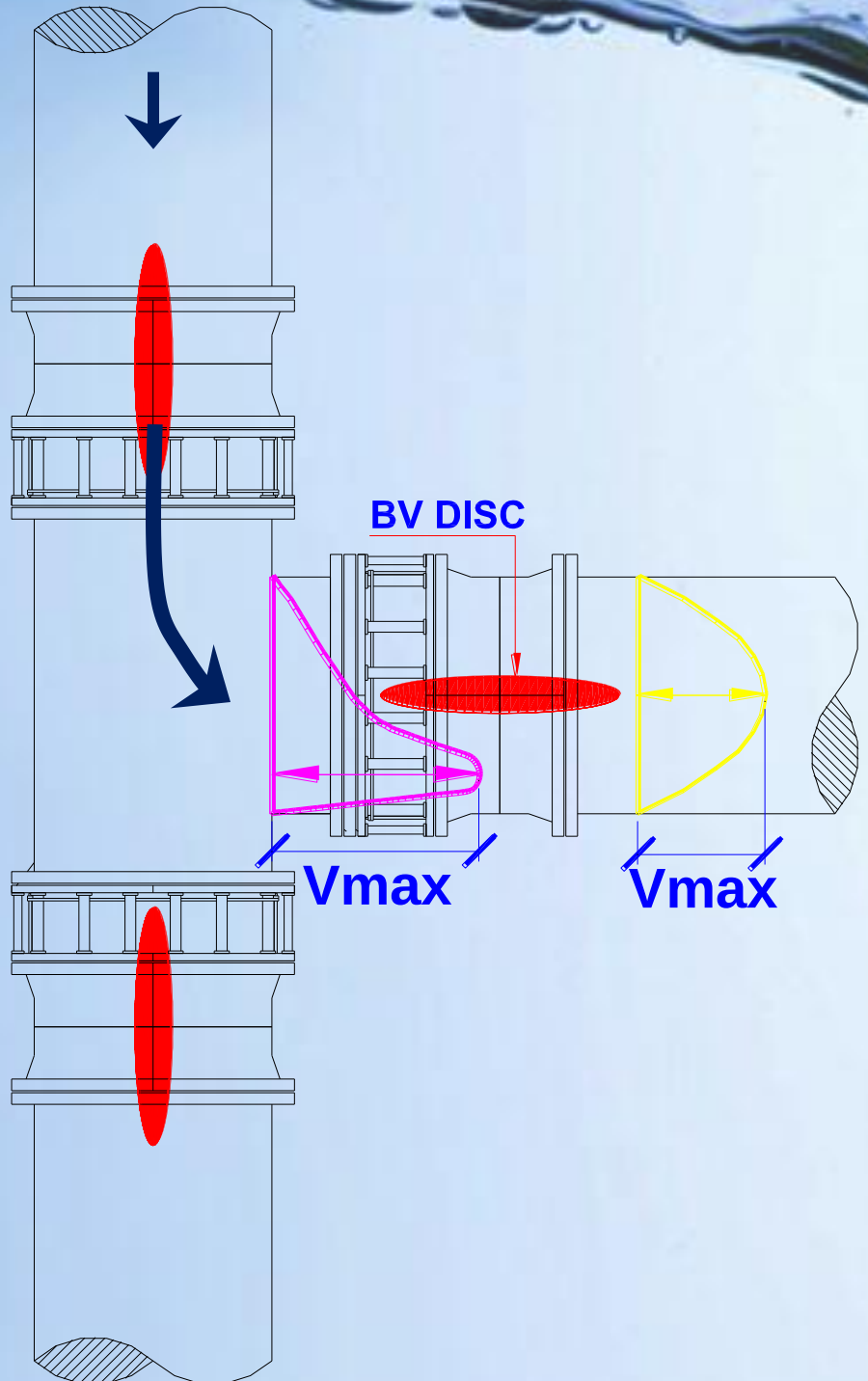
BV DISC
Vmax
Vmax

INSTALLATION RECOMMENDATIONS

- Butterfly valves should be provided with a minimum of two to five diameters of straight pipe upstream of the valve.
- If this cannot be met, the valve stem may be oriented in the position best suited for operation and maintenance.
- When a butterfly valve is preceded by an elbow/tee, the valve stem must be oriented in the same plane as the elbow or tee.

BV CHAMBER

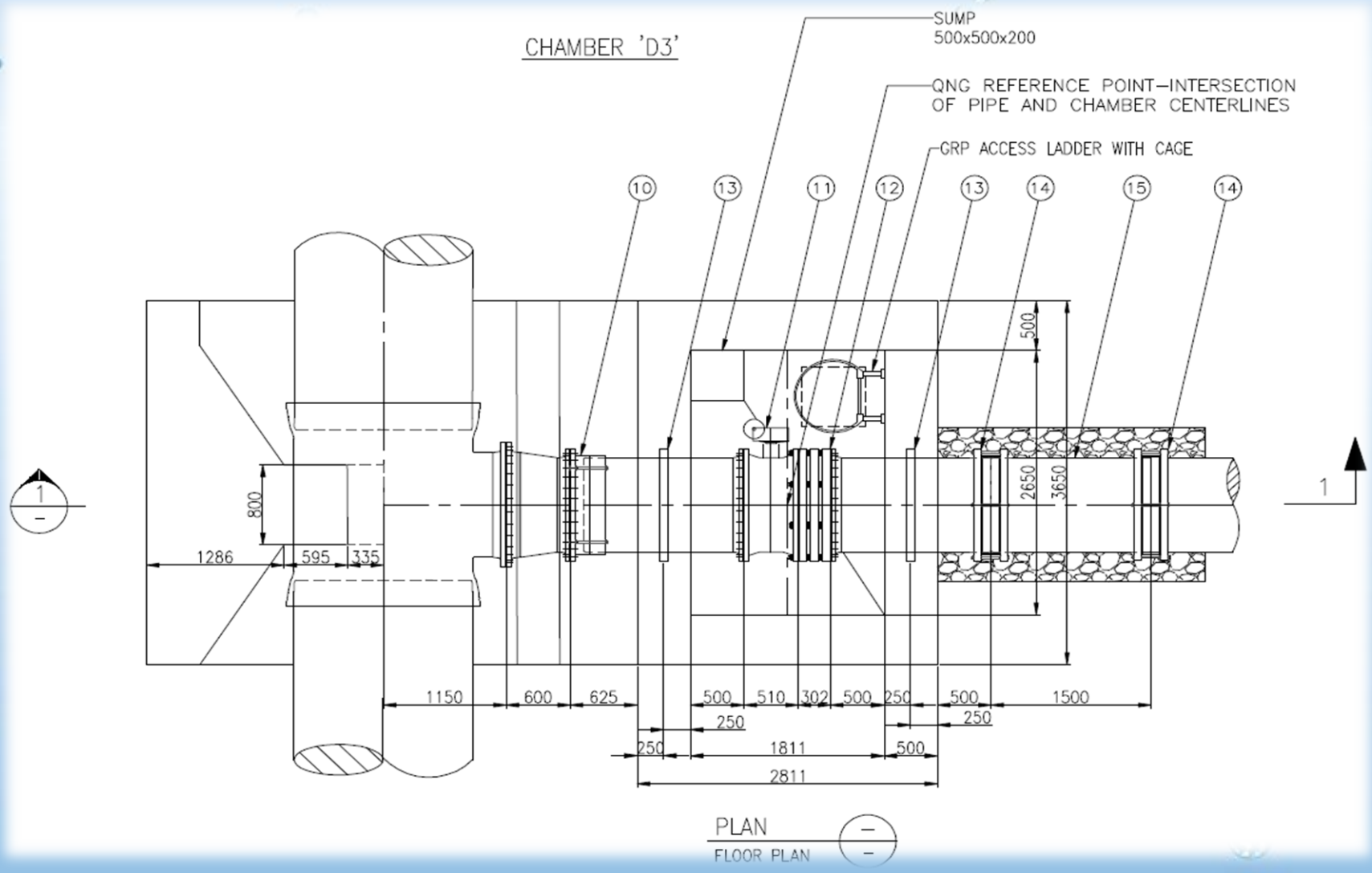
CHAMBER 'D3'
SUMP
500x500x200
QNG REFERENCE POINT–INTERSECTION
OF PIPE AND CHAMBER CENTERLINES
GRP ACCESS LADDER WITH CAGE
10
13
11
12
13
14
15
14
500
2650
3650
800
1286
595
335
1150
600
625
500
510
302
500
250
500
1500
250
250
250
1811
500
2811
1
1
PLAN
FLOOR PLAN

APPLICATION NEXT TO BEND/ TEE

INCORRECT INSTALLATION

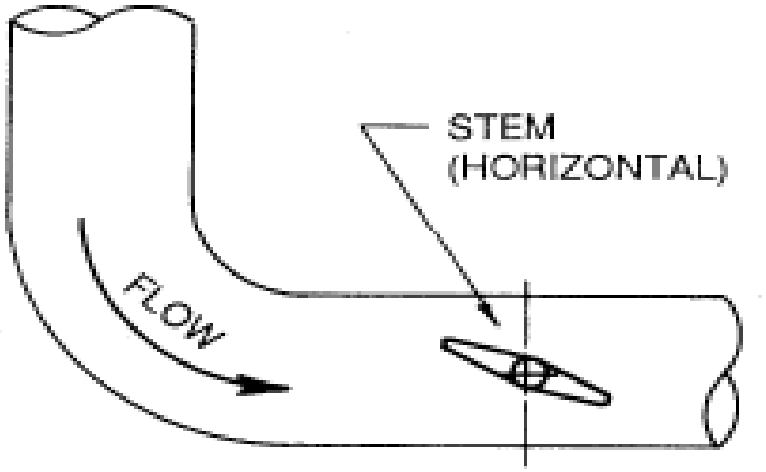

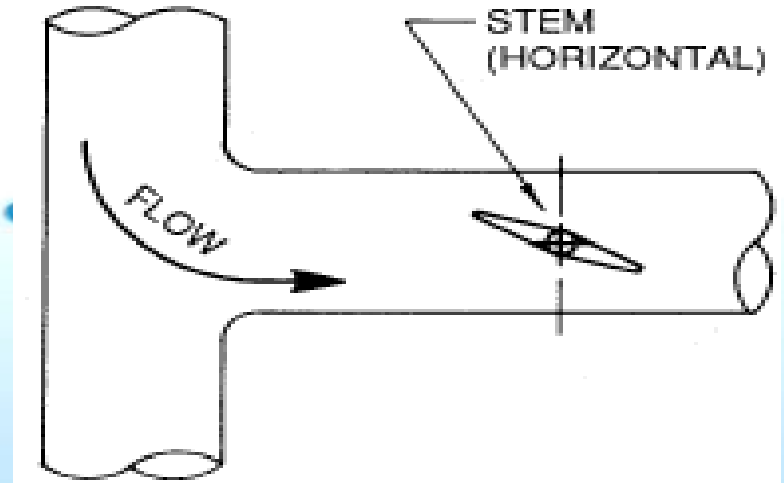

CORRECT INSTALLATION

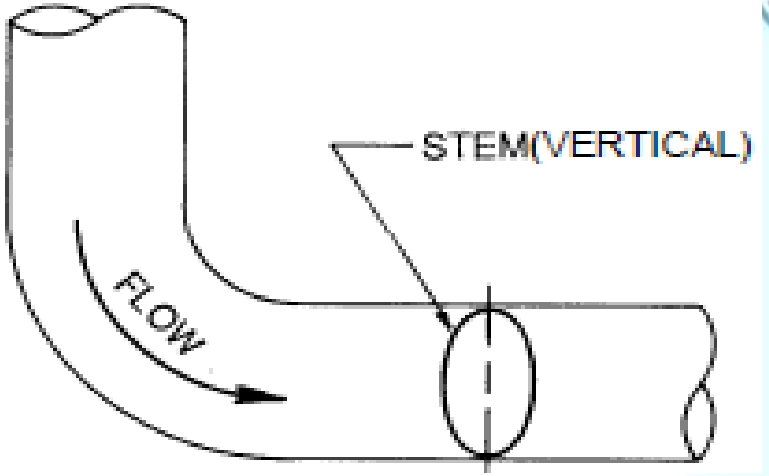

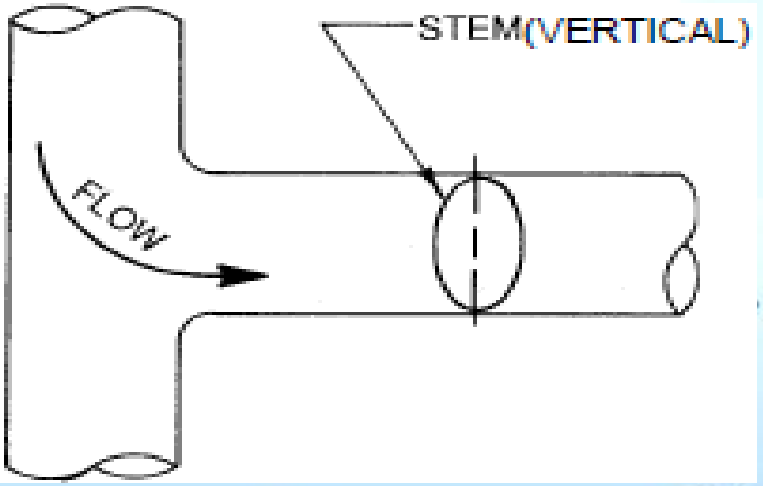

WASTEWATER APPLICATION

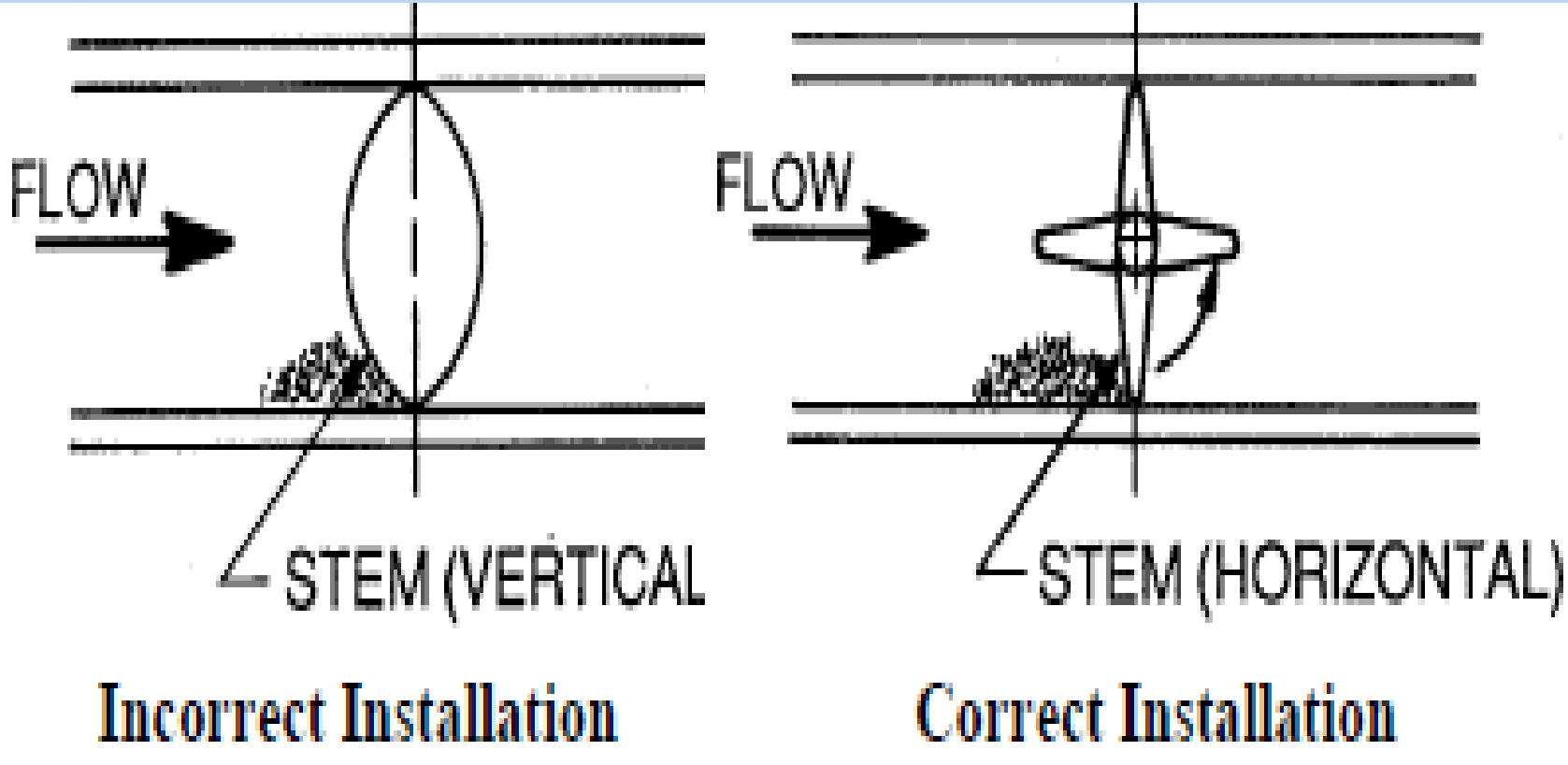

HBK STATEMENT ON EPC/PC CONTRACTS
HBK A CONTRACTOR'S ENGINEERING COMPANY

- PREPARATION AND EXECUTION OF EPC OR OTHER CONSTRUCTION PROJECTS REQUIRES:
- THEORETICAL KNOWLEDGE & SCIENTIFIC APPROACH
- PRACTICAL CONSTRUCTION & OPERATION EXPERIENCE
- ADVANCED CONSTRUCTION EQUIPMENT
- SKILLED EXPERTISE FROM DESIGN, EXECUTION TO O&M
- FLEXIBLE APPROACH TO SUIT ALL SITE CONDITIONS
- CLIENTS AS WELL AS OTHER CONTRACTORS AND CONSULTANTS CAN ALL BENEFIT FROM THIS UNIQUE COMBINATION OF "THINKING AND DOING FROM CONCEPT TO COMMISSIONING"

THANK YOU